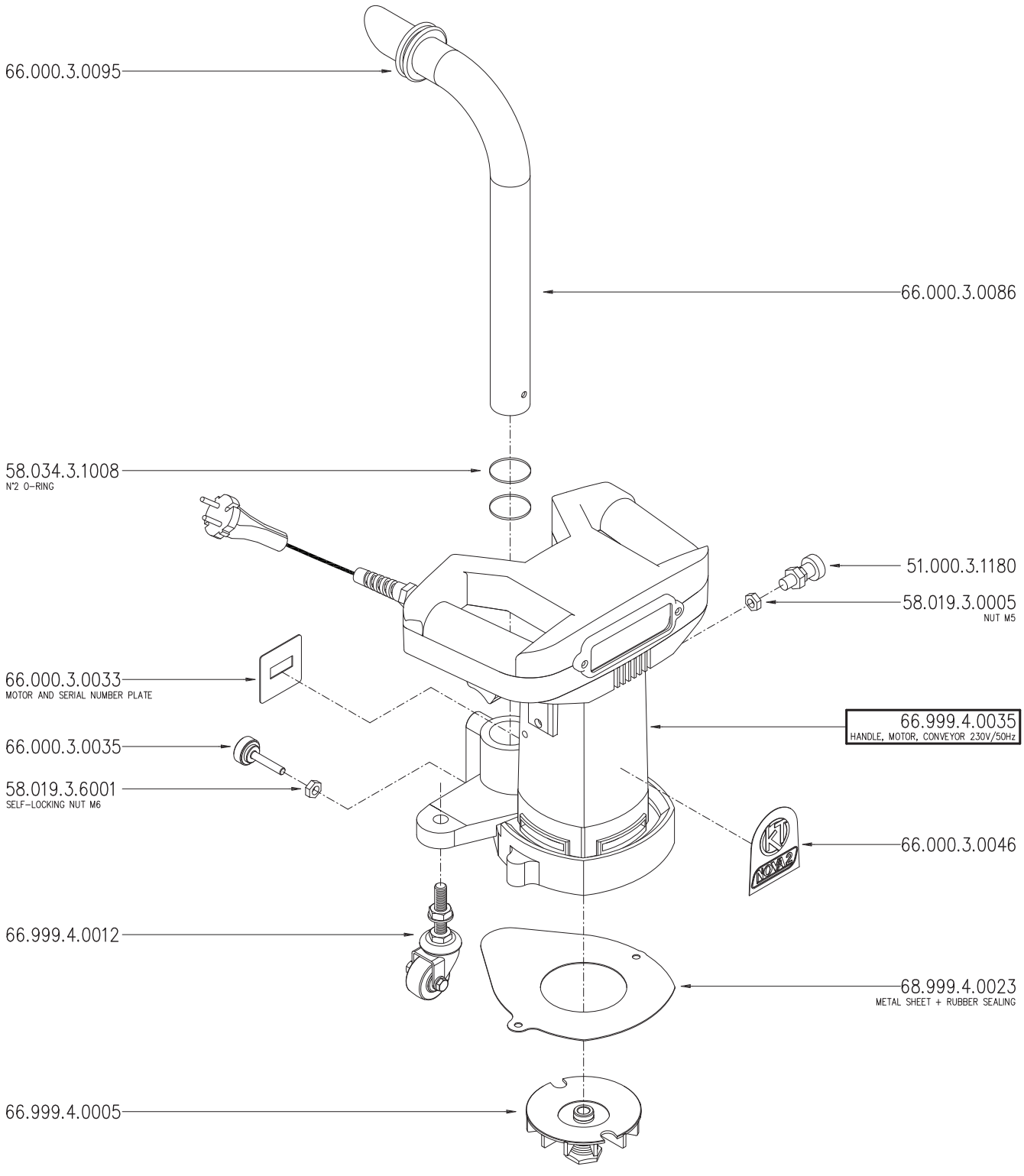

Item # & Motor Specification		All Part #'s Begin With "ASK"
AMK281002	230V/50Hz, 1.15kW	

Bona CombiEdge
Loxam Edition

by KÜNZLE & TASIN

68.999.4.0028

MOTOR + CONVEYOR

230-240V/50Hz

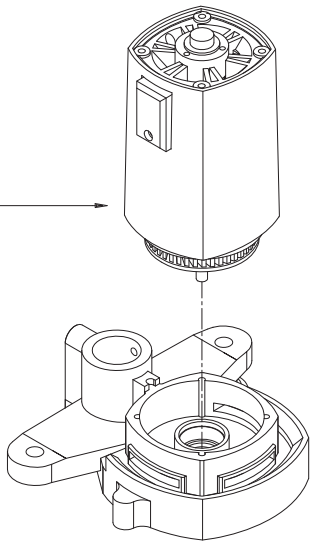

66.000.3.0030
MOTOR 230-240V/50Hz

66.000.4.0001NO
CONVEYOR

66.000.3.0030

MOTOR 230-240V/50Hz

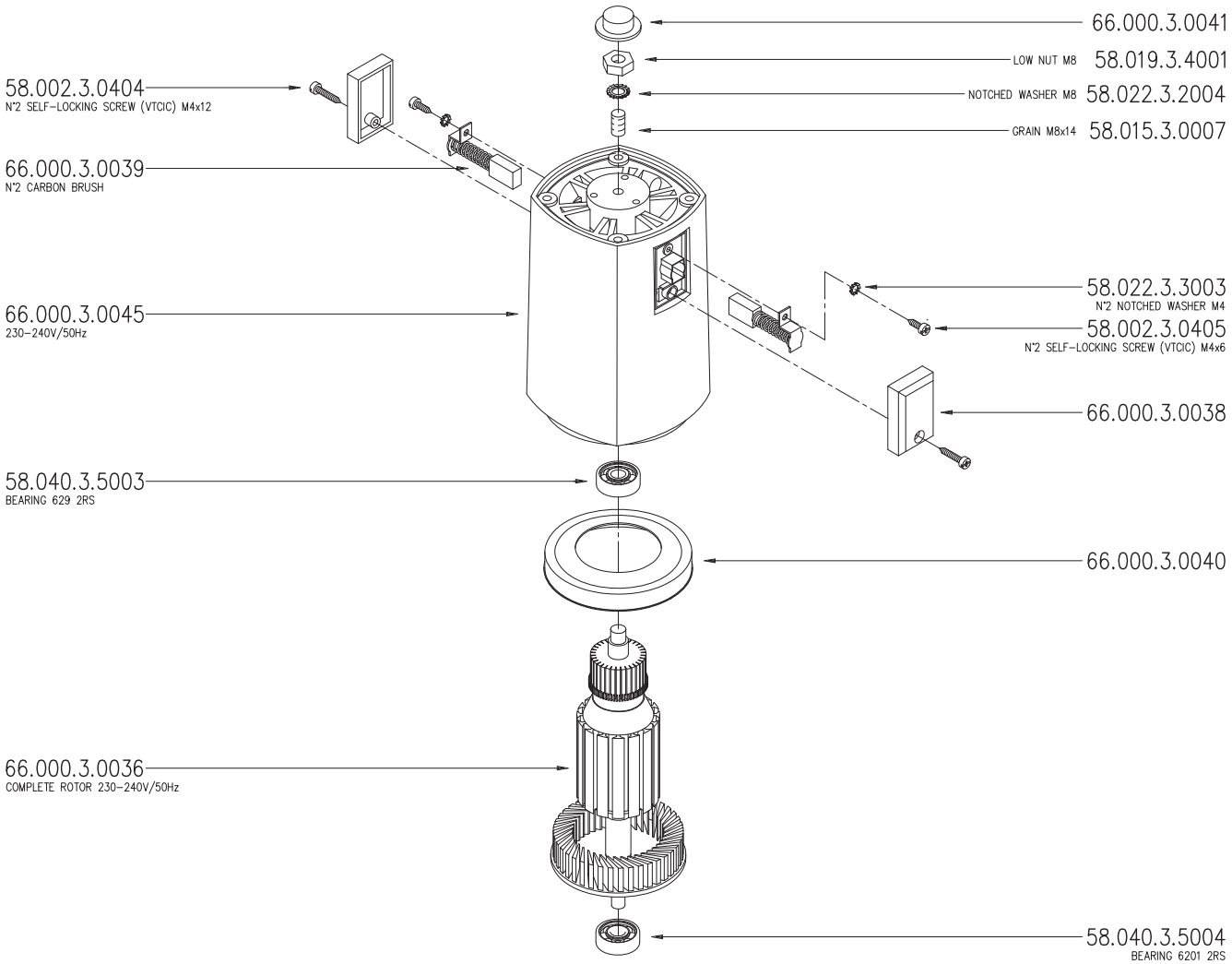

66.000.3.0041

LOW NUT M8 58.019.3.4001

NOTCHED WASHER M8 58.022.3.2004

GRAIN M8x14 58.015.3.0007

58.002.3.0404
N°2 SELF-LOCKING SCREW (VTCIC) M4x12

66.000.3.0039
N°2 CARBON BRUSH

66.000.3.0045
230-240V/50Hz

58.022.3.3003
N°2 NOTCHED WASHER M4

58.002.3.0405
N°2 SELF-LOCKING SCREW (VTCIC) M4x6

66.000.3.0038

58.040.3.5003
BEARING 629 2RS

66.000.3.0040

66.000.3.0036
COMPLETE ROTOR 230-240V/50Hz

58.040.3.5004
BEARING 6201 2RS

COMPLETE HANDLE

230–240V/50Hz

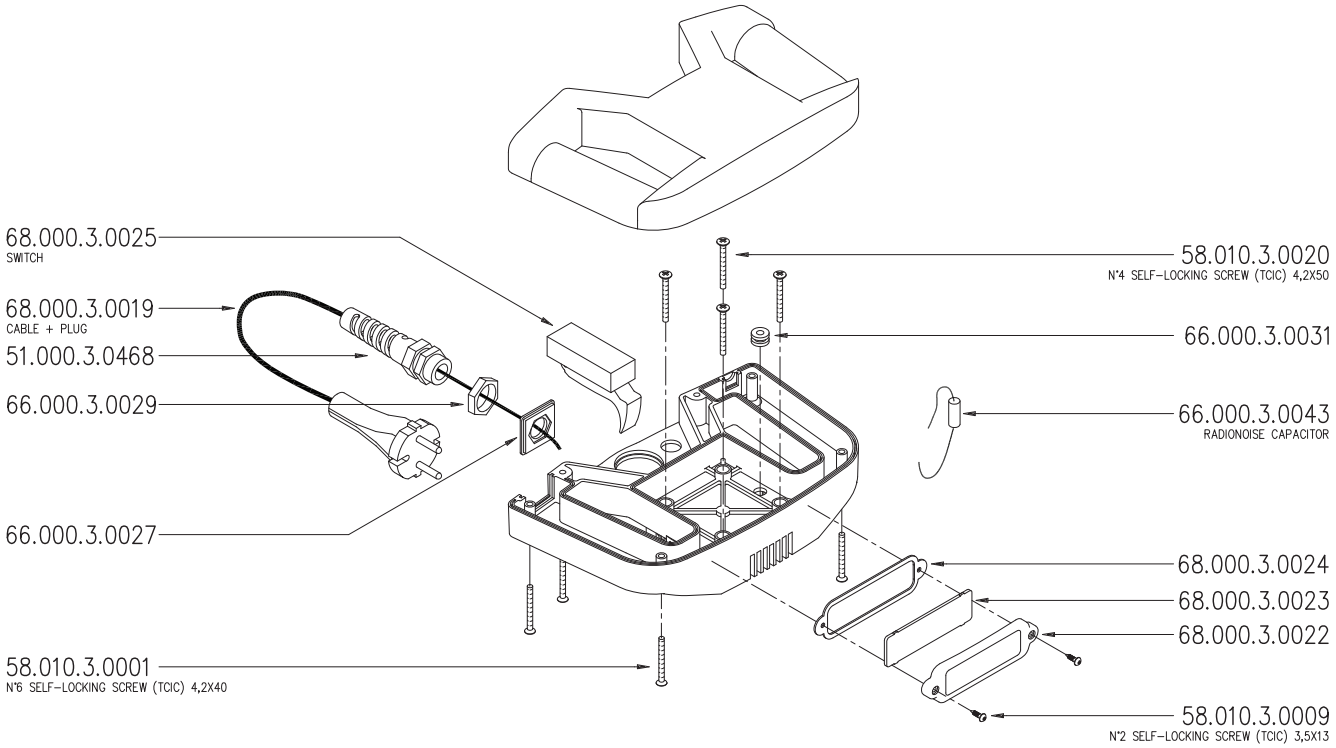

68.999.4.0053

LED CARD GROUP 230V/50Hz

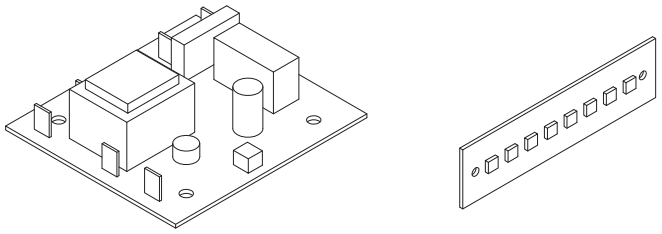

66.999.4.0032

HANDLE SHELLS (pair only)

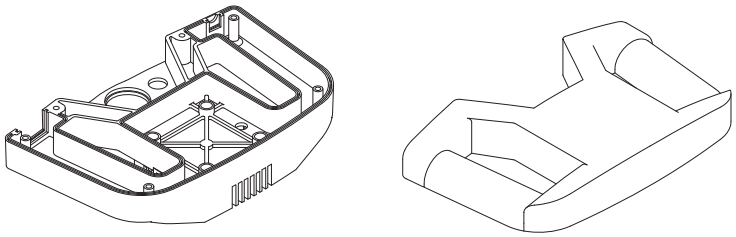

66.999.4.0023RT

COMPLETE SHORT ARM RAL 3020

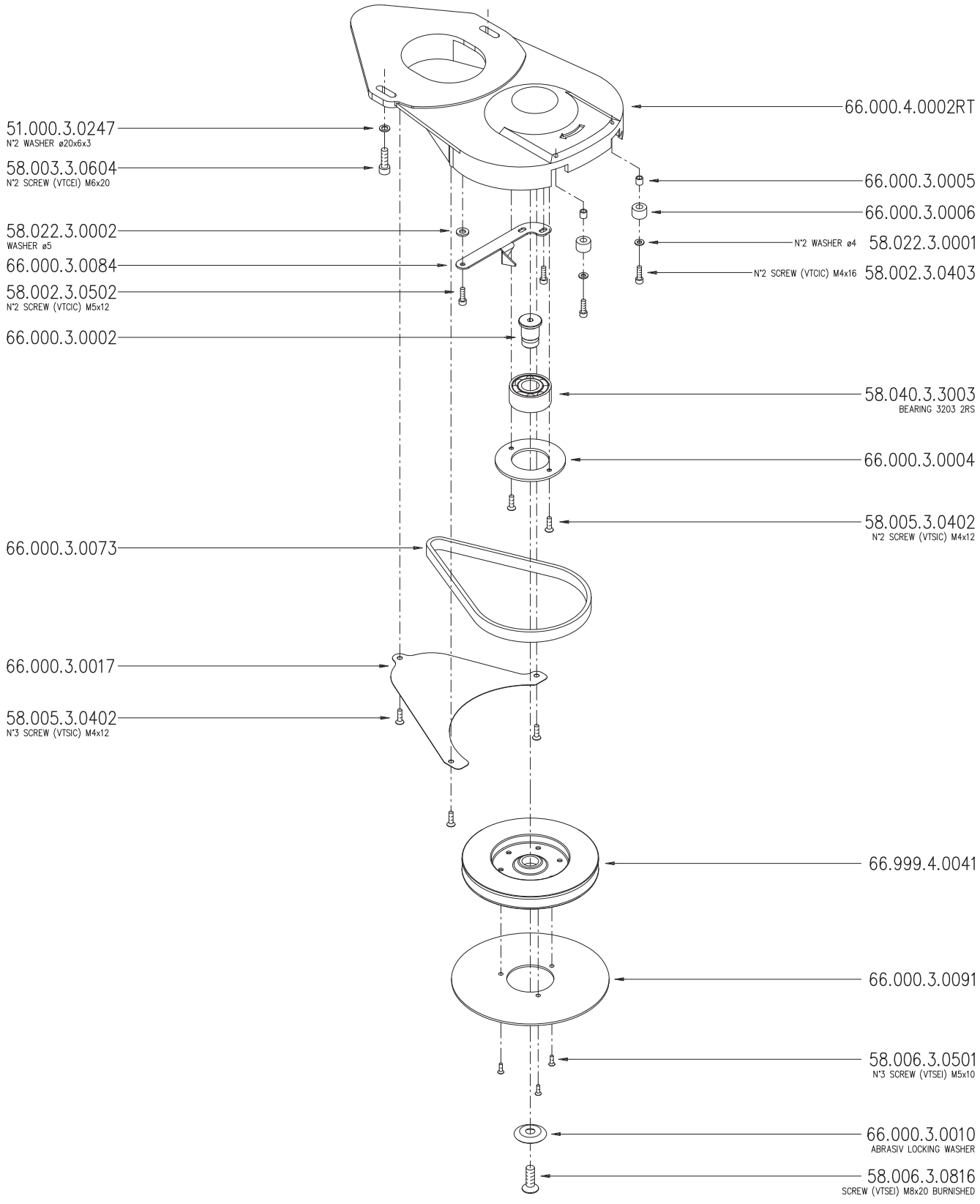

29.000.3.0115

7 MT 3x2,5 MM POWER CABLE
(SCHUKO SOCKET AND PLUG)

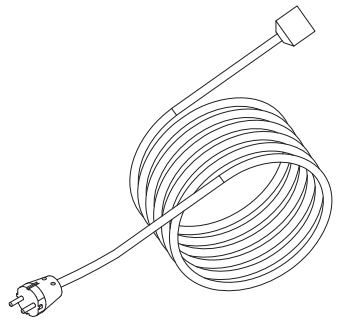

51.000.3.1283

PLUG ADAPTER 13A UK

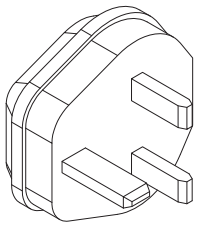

66.000.3.0142

3 PAPER DUST BAGS BLISTER

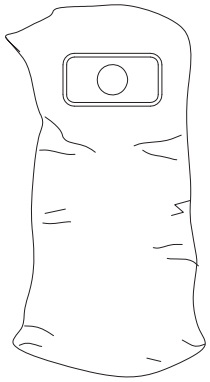

66.999.4.0142

PAPER BAG HOLDING BAR GROUP

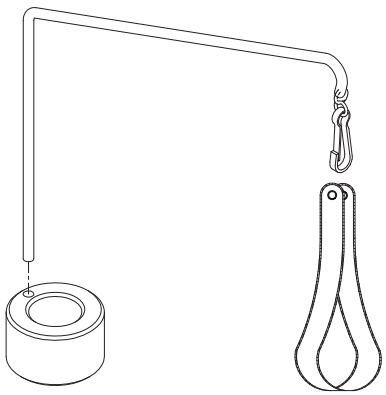

66.000.4.0034

FABRIC DUST BAG (WITH LOGO)

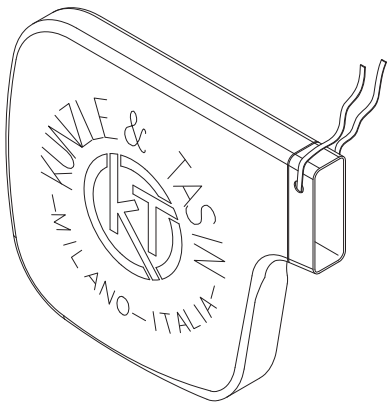

66.999.4.0020

TOOL BAG

